Exploded view TSCS 1432 Buiten

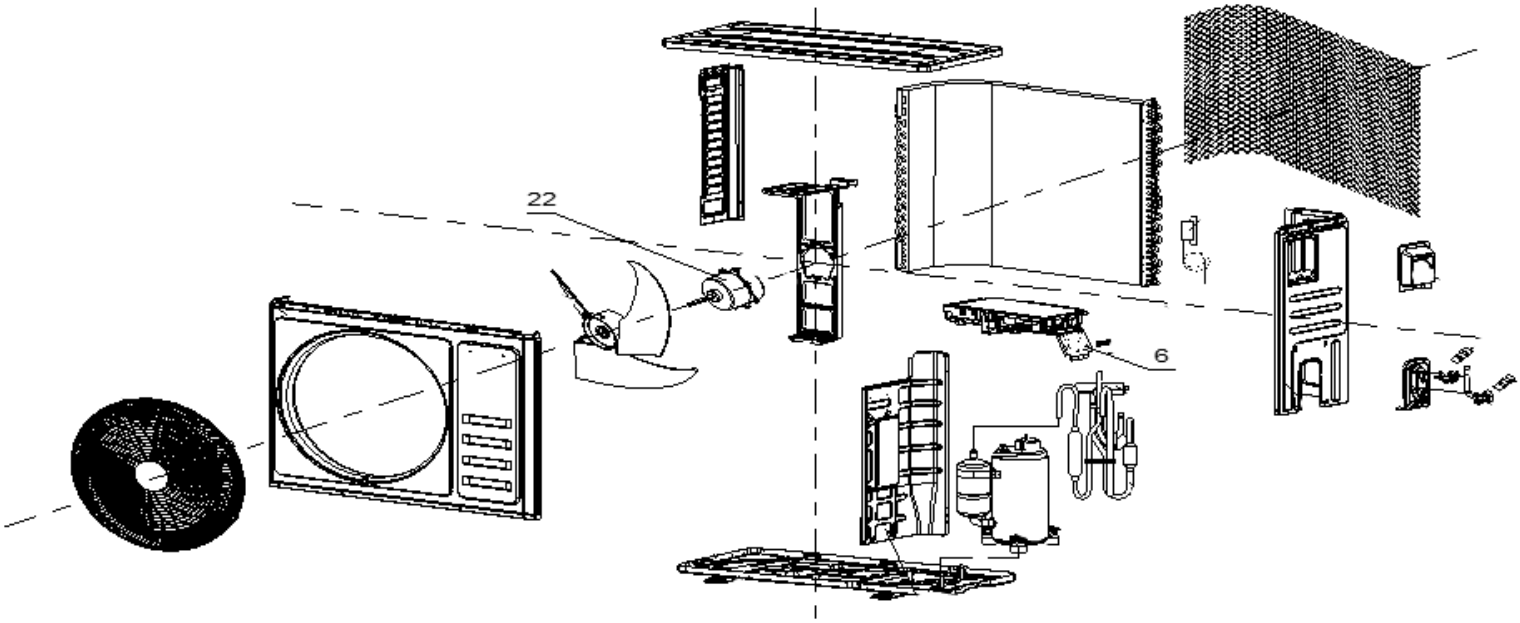

Nr	Naam Holding	EAN
6	Hoofdprint bui. unit SPHPCR102390	8713508790589
22	Motor bui. unit SPHPCR102385	8713508790534
/	Sensor (compleet) bui. unit SPHPCR102398	8713508790664